Technical Information
Waterpilot FMX167

Hydrostatic level measurement
Compact device for level measurement

Reliable and robust level probe with ceramic measuring cell

Application

The Waterpilot FMX167 is a pressure sensor for hydrostatic level measurement. Three versions of FMX167 are available at Endress+Hauser:

- FMX167 with a stainless steel housing, outer diameter of 22 mm (0.87 in): Standard version suitable for drinking water applications and for use in bore holes and wells with small diameters
- FMX167 with a stainless steel housing, outer diameter of 42 mm (1.65 in): Heavy duty version, easy clean flush-mounted process diaphragm. Ideally suited to wastewater and sewage treatment plants
- FMX167 with plastic insulation, outer diameter of 29 mm (1.14 in): Corrosion resistant version generally for use in saltwater, particularly for ship ballast water tanks.

Your benefits

- High mechanical resistance to overload and aggressive media
- High-precision, robust ceramic measuring cell with long-term stability
- Climate proofed sensor thanks to completely potted electronics and 2-filter pressure compensation system
- 4 to 20 mA output signal with integrated overvoltage protection
- Simultaneous measurement of level and temperature with optionally integrated Pt100 temperature sensor
- Usage in drinking water: KTW, NSF, ACS
- Approvals: ATEX, FM and CSA
- Marine certificate: GL, ABS
- Extensive range of accessories provides complete measuring point solutions

Endress+Hauser
People for Process Automation

Table of contents

Document information

Document conventions

Safety symbols

Symbol	Meaning
DANGER A0011189-DE	**DANGER!** This symbol alerts you to a dangerous situation. Failure to avoid this situation will result in seriousor fatal injury.
WARNING A0011190-DE	**WARNING!** This symbol alerts you to a dangerous situation. Failure to avoid this situation can result in seriousor fatal injury.
CAUTION A0011191-DE	**CAUTION!** This symbol alerts you to a dangerous situation. Failure to avoid this situation can result in minoror medium injury.
NOTICE A0011192-DE	**NOTICE!** This symbol contains information on procedures and other facts which do not result in personalinjury.

Electrical symbols

Symbol	Meaning
A0018335	**Direct current** A terminal to which DC voltage is applied or through which direct current flows.
A0018336	**Alternating currrent** A terminal to which alternating voltage is applied or through which alternating current flows.
A0018337	**Direct current and alternating current** ▪ A terminal to which alternating voltage or DC voltage is applied. ▪ A terminal through which alternating current or direct current flows.
A0018338	**Ground connection** A grounded terminal which, as far as the operator is concerned, is grounded via a grounding system..
A0018339	**Protective ground connection** A terminal which must be connected to ground prior to establishing any other connections.
A0011201	**Equipotential connection** A connection that has to be connected to the plant grounding system: This may be a potential equalization line or a star grounding system depending on national or company codes of praxis.

Symbols for certain types of information

Symbol	Meaning
A0011193	**Tip** Indicates additional information.
A0015484	**Reference to page** Refers to the corresponding page number.

Symbols in graphics

Symbol	Meaning
1, 2, 3, 4, ...	Item numbers
A, B, C, D, ...	Views

 A0011187	**Hazardous area** Indicates a hazardous area.
 A0011188	Safe area (non-hazardous area) Indicates a non-hazardous location.

Symbols at the device

Symbol	Meaning
	**Connecting cable immunity to temperature change** Indicates that the connecting cables must be able to withstand temperatures of at least 85 °C (185 °F).

Function and system design

Device selection

Waterpilot FMX167	 A0018640	 A0018641	 A0018642
Field of application	Hydrostatic level measurement in deep wells e.g. drinking water	Hydrostatic level measurement in wastewater	Hydrostatic level measurement in saltwater
	NOTICE **The Waterpilot is not suitable for use in biogas plants since the gases can diffuse through the elastomers (seals, extension cable).** ▸ For applications with biogas Endress+Hauser offers the level transmitter Deltapilot.		
Process connection	▪ Mounting clamp ▪ Extension cable mounting screw with G 1½" A or NPT 1½" thread		
Outer diameter	22 mm (0.87 in)	42 mm (1.65 in)	max. 29 mm (max. 1.14 in)
Extension cable	PE, PUR, FEP (→ 📄 22)		
Seals	▪ FKM Viton ▪ EPDM [1]	FKM Viton	▪ FKM Viton ▪ EPDM [1]
Measuring ranges	▪ Nine fixed pressure measuring ranges in bar, mH_2O, psi and ftH_2O, from 0 to 0.1 bar to 0 to 20 bar (0 to 1 mH_2O to 0 to 200 mH_2O/ 0 to 1.5 psi to 0 to 300 psi/0 to 3 ftH_2O to 0 to 600 ftH_2O) ▪ Customer-specific measuring ranges; factory-calibrated		▪ Seven fixed pressure measuring ranges in bar, mH_2O, psi and ftH_2O, from 0 to 0.1 bar to 0 to 4 bar (0 to 1 mH_2O to 0 to 40 mH_2O/0 to 1.5 psi to 0 to 60 psi/ 0 to 3 ftH_2O to 0 to 150 ftH_2O) ▪ Customer-specific measuring ranges; factory-calibrated
Overload	Up to 40 bar (600 psi)		Up to 25 bar (375 psi)
Process temperature range	−10 to +70 °C (+14 to +158 °F)		0 to +50 °C (+32 to +122 °F)
Ambient temperature range	−10 to +70 °C (+14 to +158 °F)		0 to +50 °C (+32 to +122 °F)
Maximum measured error	±0.2 % of upper range value (URV)		
Supply voltage	10 to 30 V DC		
Output	4 to 20 mA		
Options	Drinking water approval	–	
	▪ Integrated Pt100 temperature sensor ▪ Integrated Pt100 temperature sensor and TMT181 temperature head transmitter (4 to 20 mA) ▪ Marine certificate		
Specialties	▪ Large selection of approvals, including ATEX II 2 G, FM and CSA ▪ High-precision, robust ceramic measuring cell with long-term stability ▪ Customer-specific cable marking		

1) Recommended for drinking water applications, not suitable for use in hazardous areas.

Measuring principle

The ceramic measuring cell is a dry measuring cell, i.e. pressure acts directly on the robust ceramic process isolating diaphragm of the Waterpilot.
Any changes in the air pressure are routed through the extension cable, via a pressure compensation tube, to the rear of the ceramic process isolating diaphragm and compensated for. A pressure-dependent change in capacitance caused by the movement of the process isolating diaphragm is measured at the electrodes of the ceramic carrier. The electronics then convert this into a signal which is proportional to the pressure and is linear to the level of the medium.

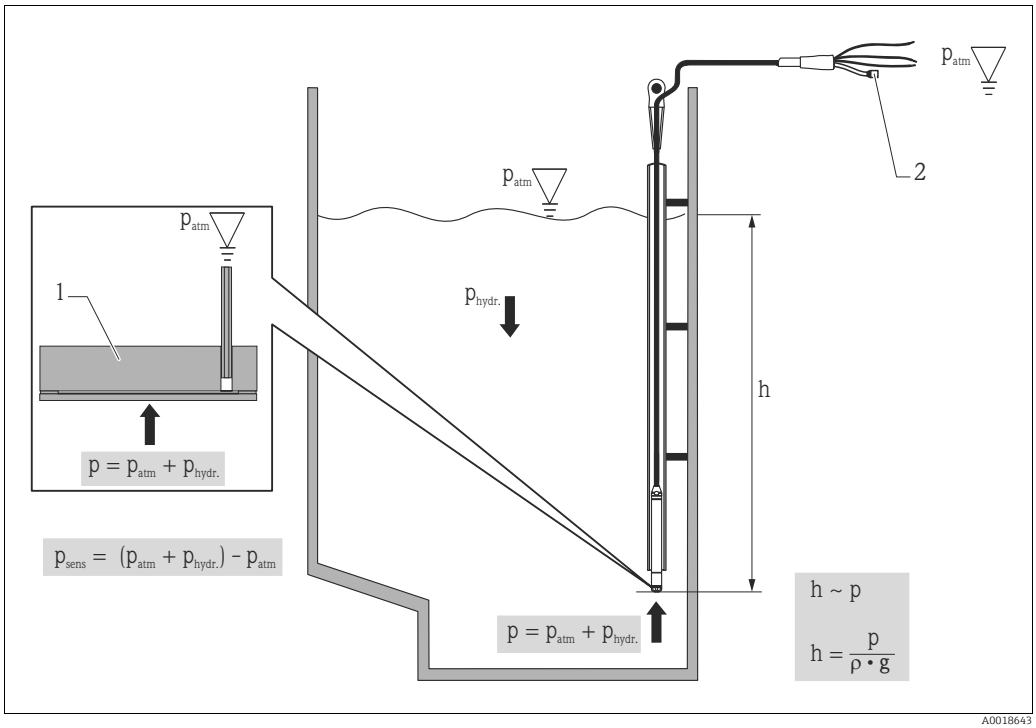

1 *Ceramic measuring cell*
2 *Pressure compensation tube*

h *Level height*
p *Total pressure = atmospheric pressure + hydrostatic pressure*
ρ *Density of the medium*
g *Gravitational acceleration*
$p_{hydr.}$ *Hydrostatic pressure*
p_{atm} *Atmospheric pressure*
p_{sens} *Pressure displayed on the sensor*

Temperature measurement with optional Pt100 resistance thermometer[1)]

Endress+Hauser also offers the Waterpilot FMX167 with an optional 4-wire Pt100 resistance thermometer to measure level and temperature simultaneously (→ 26). The Pt100 belongs to Accuracy Class B in accordance with DIN EN 60751.

Temperature measurement with optional Pt100 and TMT181 temperature head transmitter [1)]

To convert the Pt100 signal to a 4 to 20 mA signal, Endress+Hauser also offers the TMT181 temperature transmitter.

1) Not for use in hazardous areas.

Measuring system

The complete standard measuring system consists of Waterpilot and a transmitter power supply unit with supply voltage of 10 to 30 V DC.

Possible measuring point solutions with a transmitter and evaluation units from Endress+Hauser:

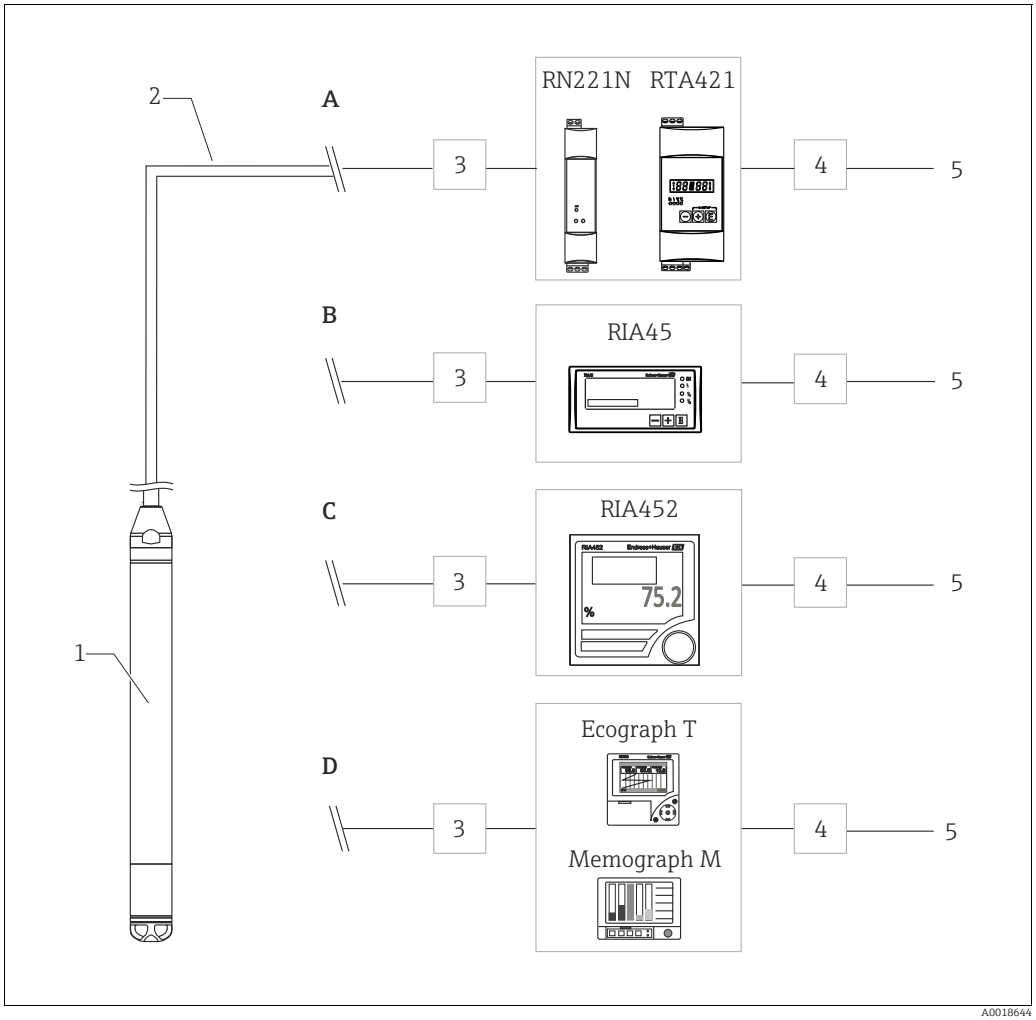

Application examples

1 Waterpilot FMX167
2 4 to 20 mA
3 Overvoltage protection (OP), e.g. HAW from Endress+Hauser (not for use in hazardous areas)
- OP on the sensor side for field installation: HAW569; for top-hat rail/DINrail: HAW562
- OP on the supply side for top-hat rail/DINrail: HAW561 (115/230 V) and HAW561K (24/48 V AC/DC)
The overvoltage protection selected must be appropriate for the supply voltage.
4 Power supply

A Simple cost-effective measuring point solution: Power supply of Waterpilot in hazardous and non-hazardous areas using RN221N active barrier. Power supply and additional control of two consumers, e.g. pumps, via limit switch RTA421 with onsite display.

B Evaluation unit RIA45 (for panel mounting) provides a power supply system, an onsite display and two switch outputs.

C If several pumps are used, the pump service life can be prolonged by alternate switching. With alternating pump control, the pump which was out of service for the longest period of time is switched on. The evaluation unit RIA452 (for panel mounting) provides this option in additional to several other functions.

D State-of-the-art recording technology with graphic display recorders from Endress+Hauser, such as Ecograph T, Memograph M, or paper recorders such as Alphalog for documenting, monitoring, visualizing and archiving purposes.

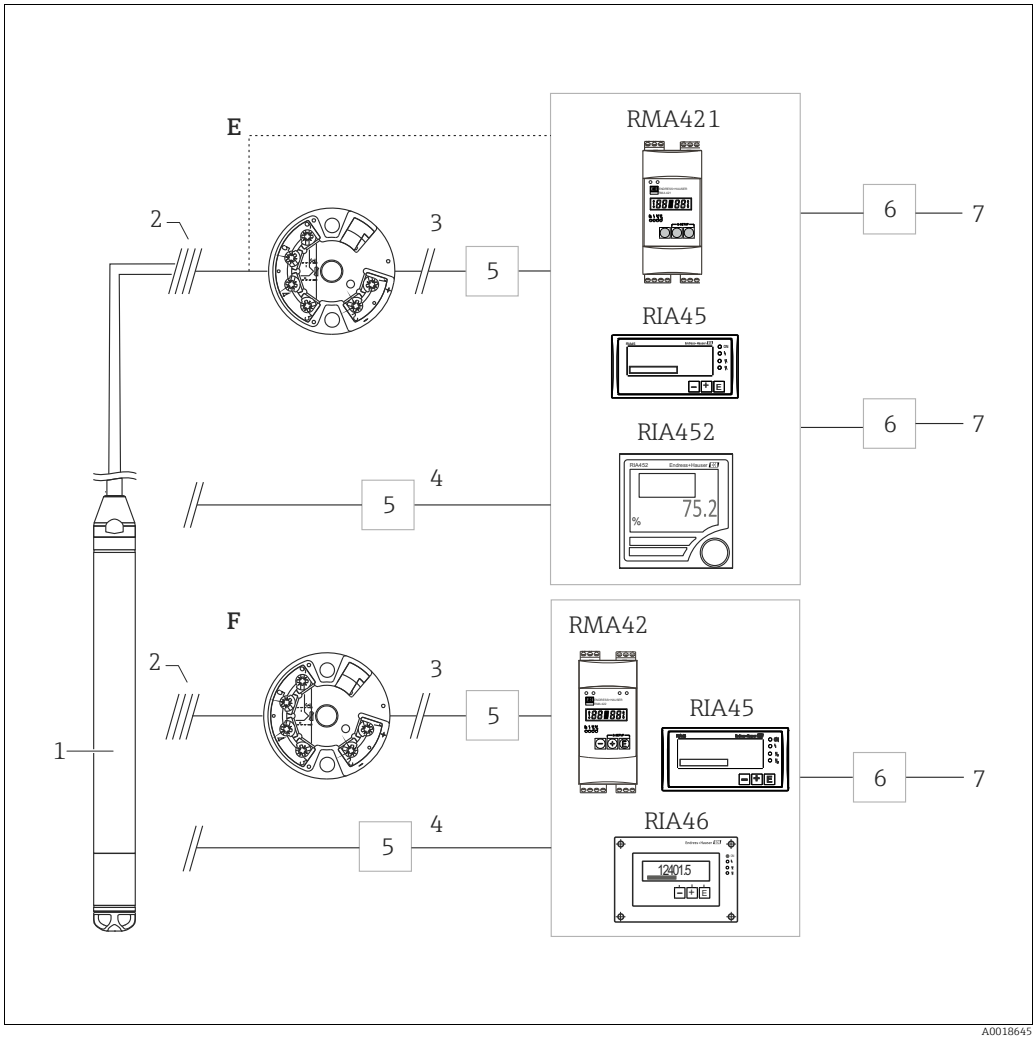

A0018645

Application examples with Pt100

1 *Waterpilot FMX167*
2 *Connection for integrated Pt100 temperature sensor in the FMX167*
3 *4 to 20 mA (Temperature)*
4 *4 to 20 mA (Level)*
5 *Overvoltage protection (OP), e.g. HAW from Endress+Hauser (not for use in hazardous areas)*
- OP on the sensor side for field installation: HAW569; for top-hat rail/DINrail: HAW562
- OP on the supply side for top-hat rail/DINrail: HAW561 (115/230 V) and HAW561K (24/48 V AC/DC)
The overvoltage protection selected must be appropriate for the supply voltage.
6 *Power supply*

E If you want to measure, display and evaluate the temperature as well as the level, e.g. to monitor temperature in fresh water to detect temperature limits for germ formation, you have the following options:
The optional TMT181 temperature head transmitter can convert the Pt100 signal to a 4 to 20 mA signal and transfer it to any common evaluation unit. The RMA421, RIA45 and RIA452 evaluation units also offer a direct input for the Pt100 signal.

F If you want to record and evaluate the level and temperature measured value with one device, use the RMA42, RIA45 and RIA46 evaluation units with two inputs. It is even possible to mathematically link the input signals with this unit. These evaluation units are not HART-compatible.

System integration

The device can be fitted with a tag name → 24 ff, "Ordering information", feature 995 "Marking".

Input

Measured variable

FMX167 + Pt100 (optional)

- Hydrostatic pressure of a liquid
- Pt100: Temperature of a liquid

TMT181 temperature head transmitter (optional)

Temperature

Measuring range

- Nine fixed pressure measuring ranges in bar, mH_2O, psi and ftH_2O (→ 24)
- Customer-specific measuring ranges or factory calibration
- Temperature measurement from −10 to +70 °C (+14 to +158 °F) optional with Pt100

Sensor measuring range [bar (psi)]	Lowest span that can be calibrated [bar (psi)]	Vacuum resistance [bar_{abs} (psi_{abs})]
0.1 (1.5)	0,01 (0.15)	0.3 (4.5)
0.2 (3.0)	0.02 (0.3)	0.3 (4.5)
0.4 (6.0)	0.04 (1.0)	0
0.6 (9.0)	0.06 (1.0)	0
1.0 (15.0)	0.1 (1.5)	0
2.0 (30.0)	0.2 (3.0)	0
4.0 (60.0)	0.4 (6.0)	0
10.0 (150) [1]	1.0 (15)	0
20.0 (300) [2]	2.0 (30)	0

1) These measuring ranges are not offered for the probe version with plastic insulation, outer diameter 29 mm (1.14 in).

Input signal

FMX167 + Pt100 (optional)

- Change in capacitance
- Pt100: change in resistance

TMT181 temperature head transmitter (optional)

Pt100 resistance signal, 4-wire

Output

Output signal

FMX167 + Pt100 (optional)

- FMX167: 4 to 20 mA for hydrostatic pressure measured value, two-wire
- Pt100: Temperature-dependent resistance value of the Pt100

TMT181 temperature head transmitter (optional)

4 to 20 mA for temperature measured value, two-wire

Load

FMX167 + Pt100 (optional)

$$R_{Lmax} \leq \frac{U - 10\ V}{0.0225\ A} - 2 \cdot 0.09\ \frac{\Omega}{m} \cdot L - R_{add}$$

A0018755-EN

TMT181 temperature head transmitter (optional)

$$R_{Lmax} \leq \frac{U - 8\ V}{0.025\ A} - R_{add}$$

A0018756-EN

R_{Lmax} = Max. load resistance [Ω]
R_{add} = Additional resistances such as resistance of evaluation unit and/or display unit, cable resistance [Ω]
U = Supply voltage [V]
L = Simple length of extension cable [m] (cable resistance per wire ≤ 0.09 Ω/m)

When using the measuring device in hazardous areas, installation must comply with the corresponding national standards and regulations and the Safety Instructions or Installation or Control Drawings.

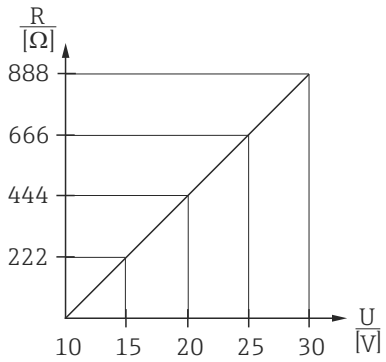

A0018667

FMX167 load chart for estimating the load resistance. Additional resistances, such as the resistance of the extension cable, have to be subtracted from the value calculated as shown in the equation.

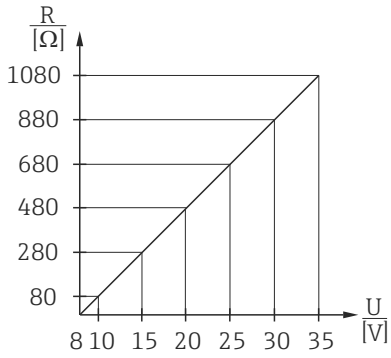

A0018668

Temperature head transmitter TMT181 load chart for estimating the load resistance. Additional resistances have to be subtracted from the value calculated as shown in the equation.

Power supply

When using the measuring device in hazardous areas, installation must comply with the corresponding national standards and regulations and the Safety Instructions or Installation or Control Drawings (XA).

Supply voltage	**FMX167 + Pt100 (optional)** ▪ FMX167: 10 to 30 V DC ▪ Pt100: 10 to 30 V DC	**TMT181 temperature head transmitter (optional)** 8 to 35 V DC
Power consumption	**FMX167 + Pt100 (optional)** ≤ 0.675 W at 30 V DC	**TMT181 temperature head transmitter (optional)** ≤ 0.875 W at 35 V DC
Current consumption	**FMX167 + Pt100 (optional)** ▪ Max. current consumption: ≤ 22.5 mA Min. current consumption: ≥ 3.5 mA ▪ Pt100: ≤ 0.6 mA	**TMT181 temperature head transmitter (optional)** ▪ Max. current consumption: ≤ 25 mA Min. current consumption: ≥ 3.5 mA ▪ Pt100 via temperature head transmitter: ≤ 0.6 mA

Electrical connection

- Reverse polarity protection is integrated in the Waterpilot FMX167 and in the temperature head transmitter TMT181. Changing the polarities will not result in the destruction of the devices.
- The cable must end in a dry room or a suitable terminal box. For installation outside, use the terminal box (IP66, IP67) with a GORE-TEX® filter from Endress+Hauser. The terminal box can be ordered using the order code of the FMX167 (→ 24) or as an accessory (order number: 52006152).

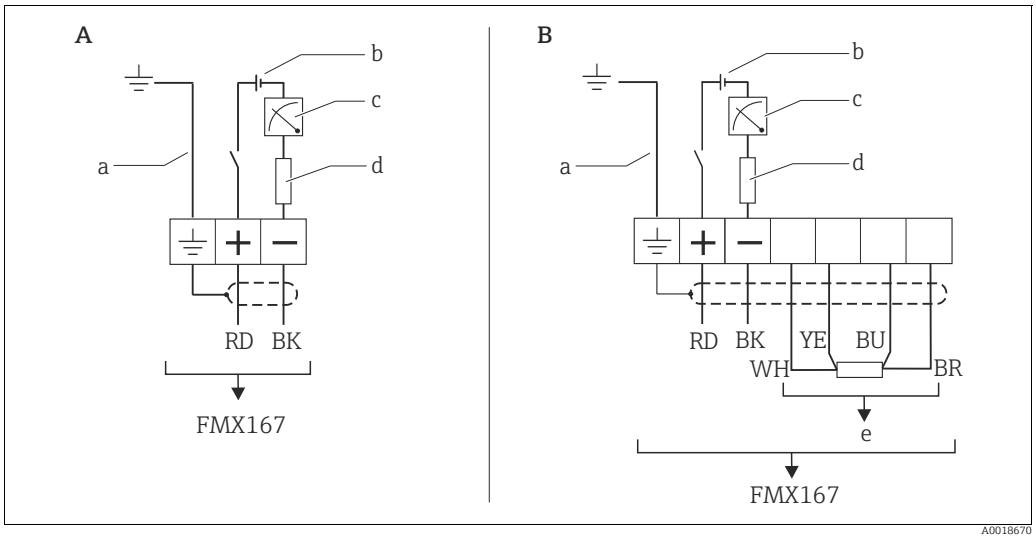

A Waterpilot FMX167, versions "7" or "3" for Feature 70 "Additional options" in the order code (→ 24)
B Waterpilot FMX167 with Pt100 [2], versions "1" or "4" for Feature 70 "Additional options" in the order code (→ 24)

a Not for FMX167 with outer diameter 29 mm (1.14 in)
b 10 to 30 V DC
c 4 to 20 mA
d Resistance (R_L)
e Pt100

2) Not for use in hazardous areas.

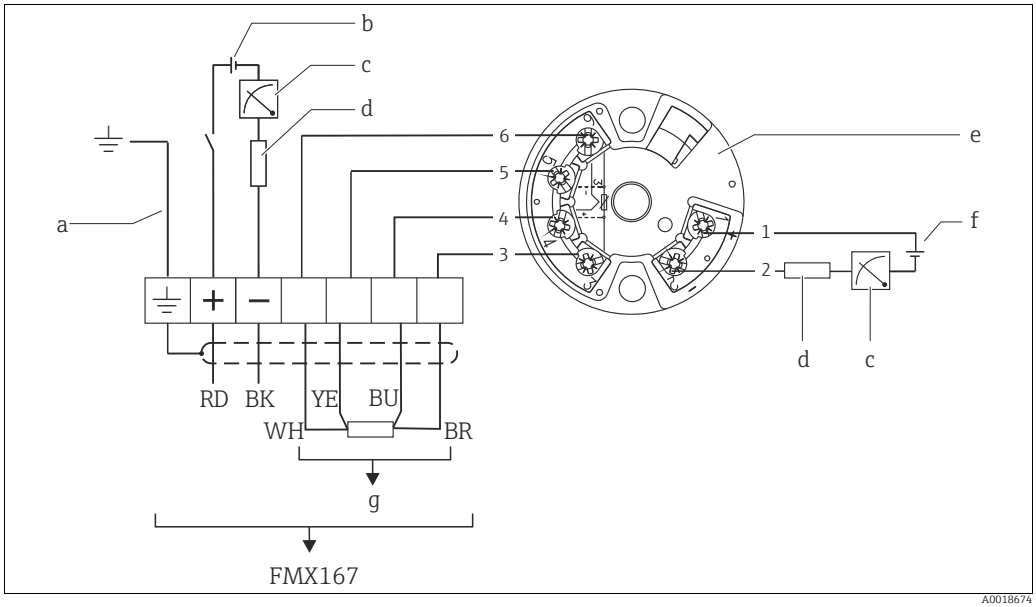

Waterpilot FMX167 with Pt100 and TMT181 temperature head transmitter [3] (4 to 20 mA), version "5" for Feature 70 in the order code (→ 24)

a Not for FMX167 with outer diameter 29 mm (1.14 in)
b 10 to 0 V DC
c 4 to 20 mA
d Resistance (R_L)
e TMT181 temperature head transmitter
f 8 to 35 V DC
g Pt100

Wire colors
RD = red, BK = black, WH = white, YE = yellow, BU = blue, BR = brown

Cable specification

FMX167 + Pt100 (optional)

- Commercially available instrument cable
- Terminals in terminal box FMX167: 0.08 to 2.5 mm^2 (28 to 14 AWG)
- If the Pt100 signal is directly connected to a display and/or evaluation unit, Endress+Hauser recommends using a shielded cable.

TMT181 temperature head transmitter (optional)

- Commercially available instrument cable
- Terminals in terminal box FMX167: 0.08 to 2.5 mm^2 (28 to 14 AWG)
- Transmitter connection: max. 1.75 mm^2 (15 AWG)

Residual ripple

FMX167 + Pt100 (optional)

No impact on the 4 to 20 mA signal up to ±5 % residual ripple within permissible range.

TMT181 temperature head transmitter (optional)

$U_{ss} \geq 5$ V at $U \geq 13$ V, $f_{max.} = 1$ kHz

3) Not for hazardous areas.

Performance characteristics

Reference operating conditions	**FMX167 + Pt100 (optional)** DIN EN 60770 T_A = 25 °C (77 °F)	**TMT181 temperature head transmitter (optional)** Calibration temperature 23 °C (73 °F) ±5 K
Maximum measured error	**FMX167 + Pt100 (optional)** ▪ Non-linearity including hysteresis and non-repeatability as per DIN EN 60770: ±0.2 % of upper range value (URV) ▪ Pt100: max. ±0.7 K (Class B to DIN EN 60751)	**TMT181 temperature head transmitter (optional)** ▪ ±0.2 K ▪ With Pt100: max. ±0.9 K
Long-term stability	**FMX167 + Pt100 (optional)** ±0.1 % of the upper range limit (URL) per year	**TMT181 temperature head transmitter (optional)** ≤ 0.1 K per year
Influence of medium temperature	▪ Thermal change in zero signal and output span for typical application temperature range 0 to +30 °C (+32 to +86°F): ±0.4 % (±0.5 %)* of the upper range limit (URL) ▪ Thermal change in zero signal and output span for the entire medium temperature range −10 to +70 °C (+14 to +158°F): ±1.0 % (±1.5 %)* of the upper range limit (URL) ▪ Temperature coefficient T_K) of zero signal and output span: 0.15 %/10 K (0.3 %/10 K)* of the upper range limit (URL) * Specifications for sensors 0.1 bar (1 mH_2O, 1.5 psi, 3 ftH_2O) and 0.6 bar (6 mH_2O, 10 psi, 20 ftH_2O)	
Rise time	**FMX167 + Pt100 (optional)** ▪ FMX167: 80 ms ▪ Pt100: 160 s	—
Warm-up period	**FMX167 + Pt100 (optional)** 20 ms	**TMT181 temperature head transmitter (optional)** 4 s
Settling time	**FMX167 + Pt100 (optional)** ▪ FMX167: 150 ms ▪ Pt100: 300 s	—

Installation

Installation instructions

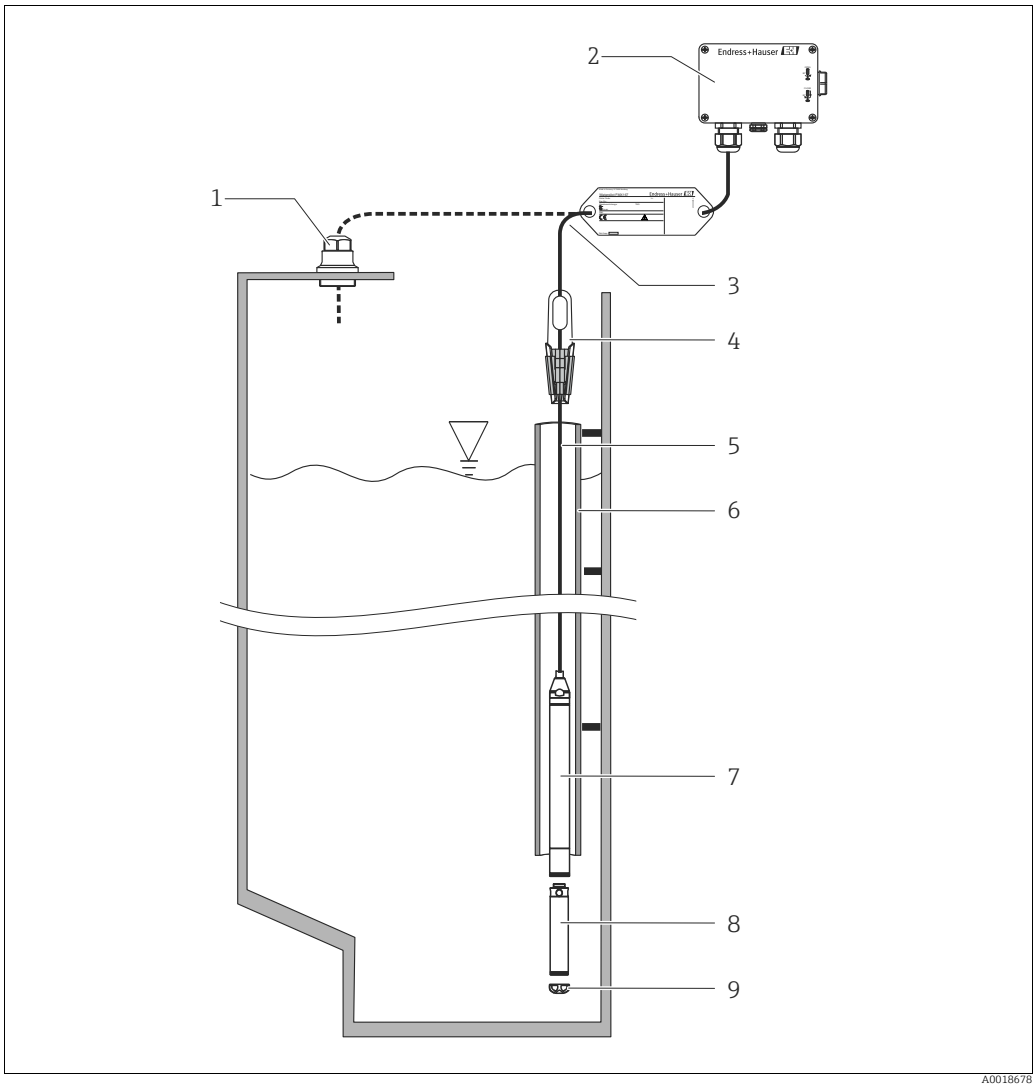

Installation examples, here illustrated with FMX167 with an outer diameter of 22 mm (0.87 in)

1 *Extension cable mounting screw can be ordered via order code or as an accessory (→ 24)*
2 *Terminal box can be ordered using the order code or as an accessory (→ 24)*
3 *Extension cable bending radius > 120 mm (4.72 in)*
4 *Mounting clamp can be ordered via order code or as an accessory (→ 24)*
5 *Extension cable, cable length (→ 22)*
6 *Guide pipe*
7 *Waterpilot FMX167*
8 *Additional weight can be ordered as an accessory for FMX167 with an outer diameter of 22 mm (0.87 in) and 29 mm (1.14 in)*
9 *Protection cap*

Additional installation instruction

- Sideways movement of the level probe can result in measuring errors. For this reason, install the probe at a point free from flow and turbulence, or use a guide tube. The internal diameter of the guide tube should be at least 1 mm (0.04 in) larger than the outer diameter of the selected FMX167.
- The device is provided with a protection cap to prevent mechanical damage to the measuring cell.
- The cable must end in a dry room or a suitable terminal box. The terminal box from Endress+Hauser provides optimum humidity and climatic protection and is suitable for outdoor installation (→ 26).
- If the cable is shortened, the filter at the pressure compensation tube has to be reattached. Endress+Hauser offers a cable shortening kit for this purpose, see the documentation SD00552P/00/A6.
- Rod length tolerances: < 5 m (16 ft): ±17.5 mm (0.69 in); > 5 m (16 ft): ±0.2 % (→ 27)
- Endress+Hauser recommends using twisted, shielded cables for any further wiring.
- Note for ship building applications: Measures for limitation of the propagation of fire along cable bundles are required (fire stops).

- The length of the extension cable is based on the planned level zero point.
  The height of the protective cap must be taken into consideration when designing the layout of the measuring point. The level zero point (E) corresponds to the position of the process isolating diaphragm.
  Level zero point = E; top of the probe = L. Dimensions see chapter "Mechanical construction".

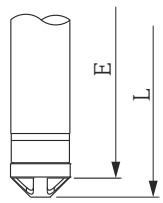

Environment

Ambient temperature range	**FMX167 + Pt100 (optional)** - With outer diameter of 22 mm (0.87 in) and 42 mm (1.65 in): −10 to +70 °C (+14 to +158 °F) (= medium temperature) - With outer diameter of 29 mm (1.14 in): 0 to +50 °C (+32 to +122 °F) (= medium temperature) **Cable** (fixed installation) – PE: −30 to +70 °C (−22 to +158 °F) – FEP: −40 to +70 °C (−40 to +158 °F) – PUR: −40 to +70 °C (−40 to +158 °F) **Terminal box** −40 to +80 °C (−40 to +176 °F)	**TMT181 temperature head transmitter (optional)** −40 to +85 °C (−40 to +185 °F)
Storage temperature range	**FMX167 + Pt100 (optional)** −40 to +80 °C (−40 to +176 °F) **Cable** (fixed installation) - PE: −30 to +70 °C (−22 to +158 °F) - FEP: −30 to +80 °C (−22 to +176 °F) - PUR: −40 to +80 °C (−40 to +176 °F) **Terminal box** −40 to +80 °C (−40 to +176 °F)	**TMT181 temperature head transmitter (optional)** −40 to +100 °C (−40 to +212 °F)
Degree of protection	**FMX167 + Pt100 (optional)** - IP68, permanently hermetically sealed - Optional terminal box: IP66, IP67	**TMT181 temperature head transmitter (optional)** - IP00, moisture condensation permissible - When mounted in the optional terminal boxes: IP66, IP67

Geometric height accordingto IEC61010-1 Ed.3	Up to 2 000 m (6 600 ft) above MSL.

Electromagnetic compatibility (EMC)	**FMX167 + Pt100 (optional)** ▪ Interference emission to EN 61326 Class B equipment, interference immunity to EN 61326 Appendix A (Industrial) ▪ Maximum deviation < 0.5 % of the span.	**TMT181 temperature head transmitter (optional)** Interference emission to EN 61326 Class B equipment, interference immunity to EN 61326 Appendix A (Industrial)

Overvoltage protection	**FMX167 + Pt100 (optional)** ▪ Integrated overvoltage protection to EN 61000-4-5 (500 V symmetrical/ 1 000 V asymmetrical) ▪ Install overvoltage protection ≥ 1.0 kV, external if necessary	**TMT181 temperature head transmitter (optional)** Install overvoltage protection, external if necessary.

Process

Medium temperature range	**FMX167 + Pt100 (optional)** ▪ With outer diameter of 22 mm (0.87 in) and 42 mm (1.65 in): −10 to +70 °C (−14 to +158 °F) ▪ With outer diameter of 29 mm (1.14 in): 0 to +50 °C (+32 to 122 °F)	**TMT181 temperature head transmitter (optional)** −40 to +85 °C (-40 to +185°F) (= ambient temperature), install temperature head transmitter outside medium.

Medium temperature limits	**FMX167 + Pt100 (optional)** ▪ With outer diameter of 22 mm (0.87 in) and 42 mm (1.65 in): −20 to +70 °C (−4 to +158 °F) In hazardous areas incl. CSA GP, the medium temperature limit is at −10 to +70 °C (+14 to +158 °F). ▪ With outer diameter of 29 mm (1.14 in): 0 to +50 °C (+32 to +122 °F) (You may operate the FMX167 in this temperature range. The specification can then be exceeded, e.g. measuring accuracy).	

Pressure specifications	Avoid steam hammering! Steam hammering can cause zero point drift. Recommendation: Residue (such as condensation or drops of water) can remain at the process isolating diaphragm after CIP cleaning and lead to local steam hammering if immediately steam is introduced. In practice, drying the process isolating diaphragm (e.g. by blowing off excess moisture) has proven to be a successful way of avoiding steam hammering.

Mechanical construction

Dimensions of the level probe

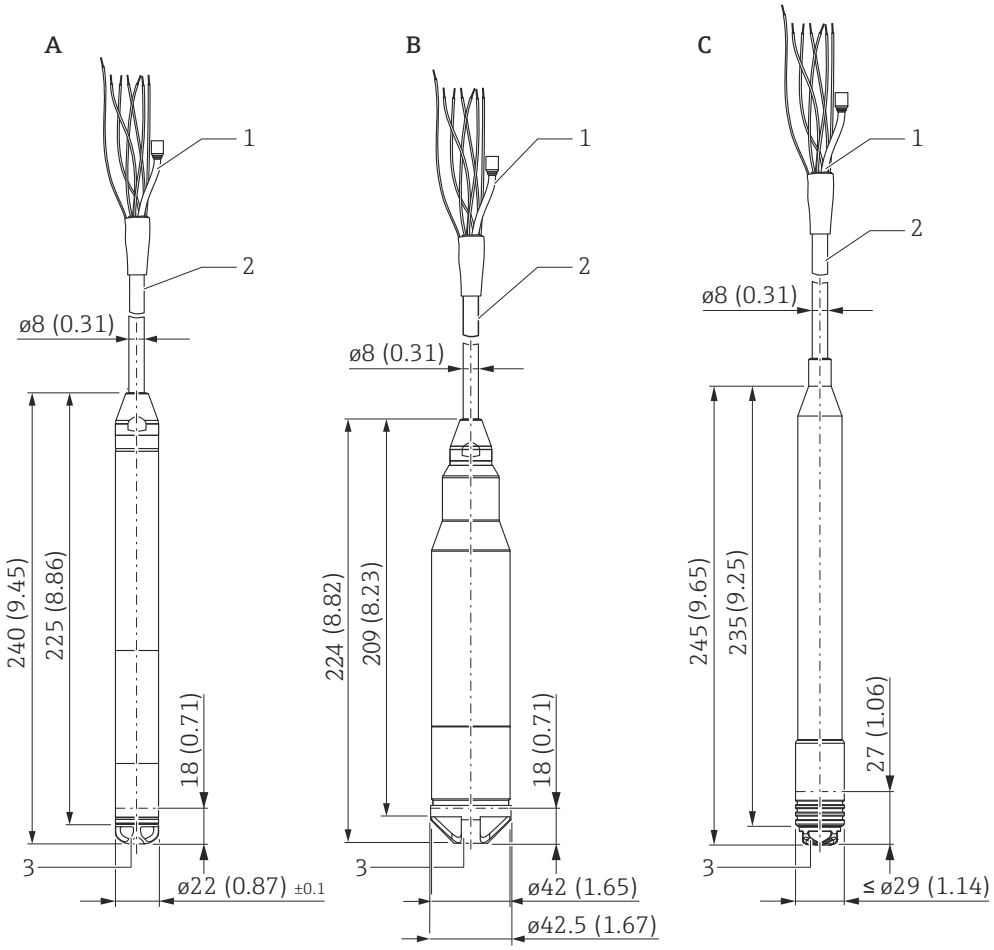

Engineering unit mm (in)

Versions of FMX167

A *In the order code: feature 30 "Probe tube", version "A" or "D" (→ 24)*
B *In the order code: feature 30 "Probe tube", version "B" (→ 24)*
C *In the order code: feature 30 "Probe tube", version "C" (→ 24)*

1 Pressure compensation tube
2 Extension cable (Length, see → 22)
3 Protection cap

Dimensions of the mounting clamp

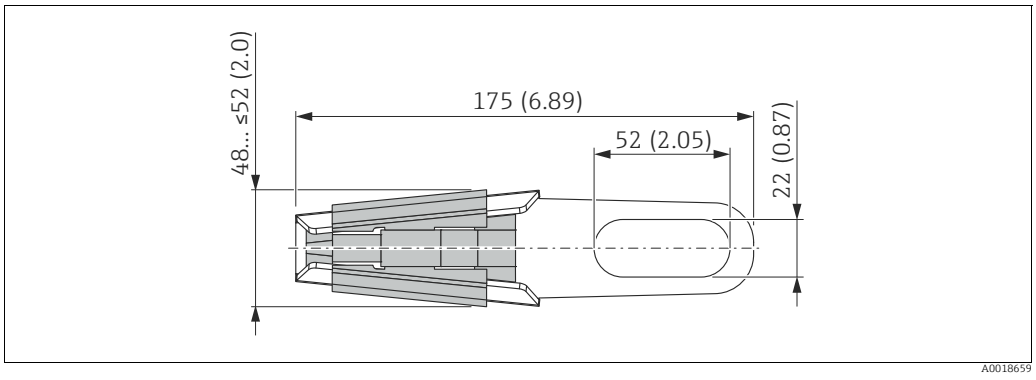

In the order code: feature 20 "Connection", version "2" (→ 24)

Dimensions of the extension cable mounting screws

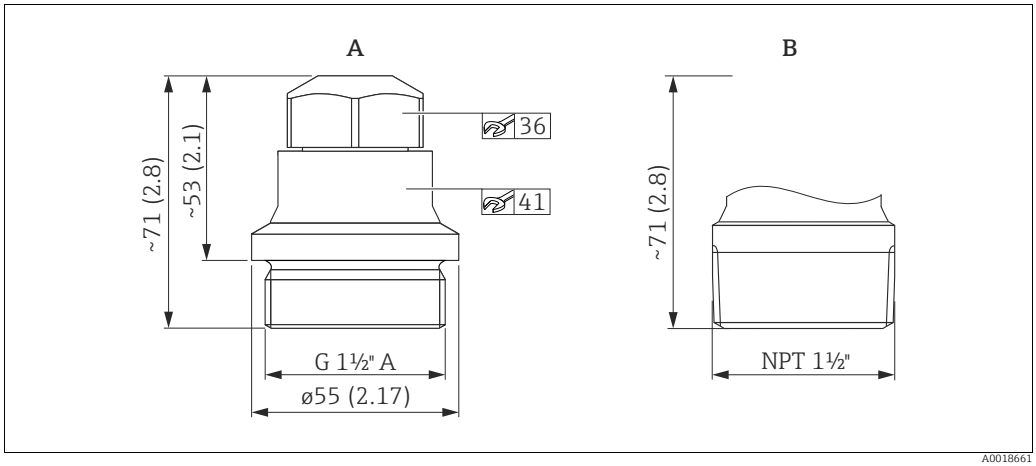

A *G 1½" A, in the order code: feature 20 "Connection", version "3" (→ 24)*
B *NPT 1½", in the order code: feature 20 "Connection" , version "4" (→ 24)*

Application in unpressurized containers only.

Dimensions of the terminal box IP66, IP67 with filter

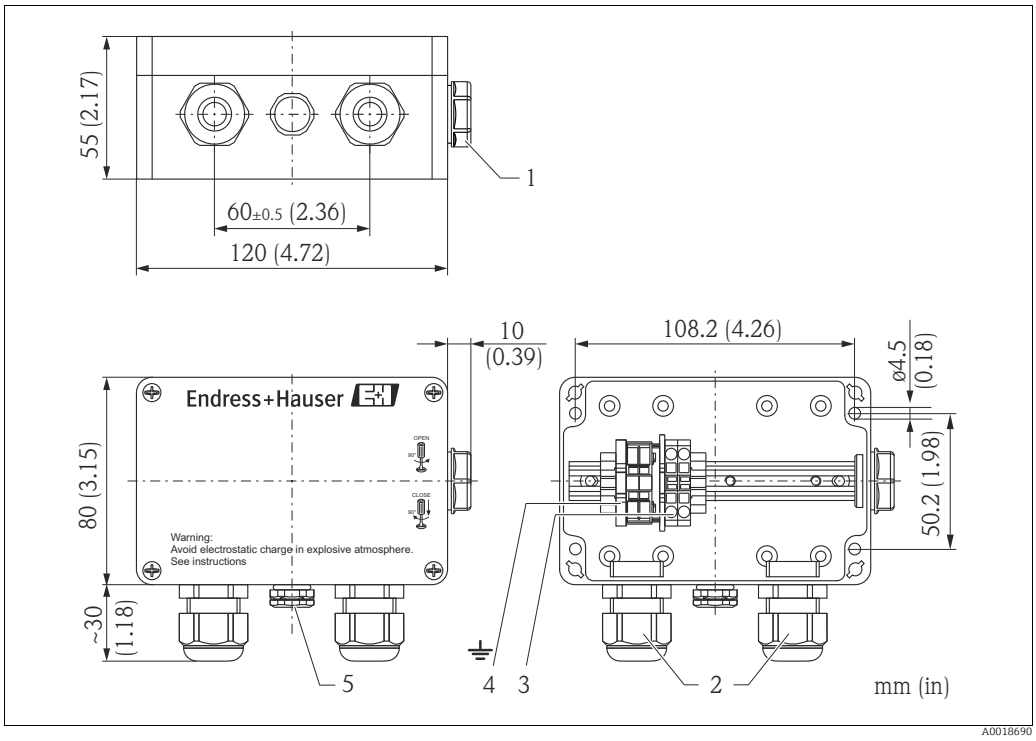

in the order code: feature 70 "Additional options" , versions "3", "4" or "5" (→ 24)

1 *Dummy plug M20x1.5*
2 *Cable gland M20x1.5*
3 *4 to 20 mA; terminals for 0.08 to 2.5 mm² (28 to 14 AWG)*
4 *Ground connection; terminals for 0.08 to 2.5 mm² (28 to 14 AWG)*
5 *GORE-TEX® filter*

If ordered together with FMX167 but without the optional TMT181 temperatur transmitter, the terminal box is incl. a 4-terminal strip.

The 4-terminal strip is not intended for use in hazardous areas incl. CSA GP.

Dimensions of the TMT181 temperature head transmitter

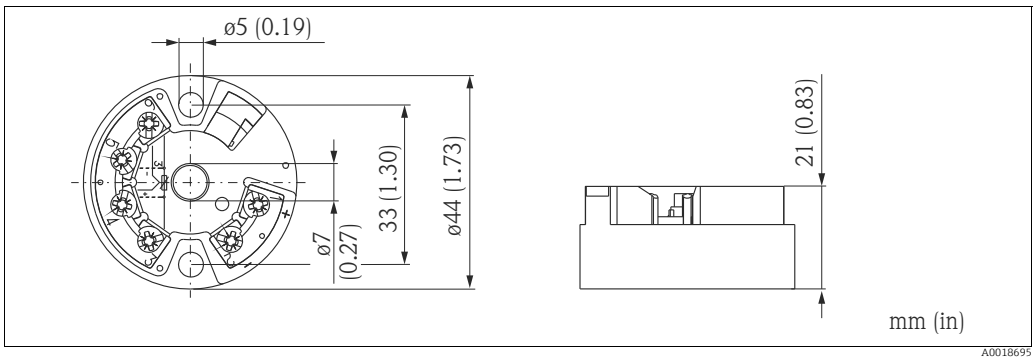

In the order code: feature 70 "Additional options", version "5" (→ 24)

Terminal box with integrated TMT181 temperature head transmitter

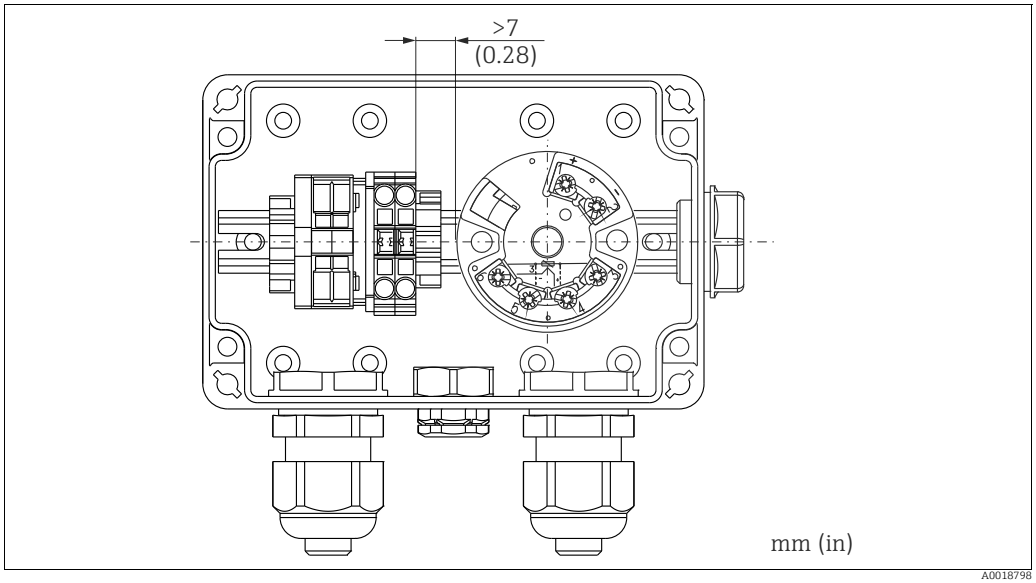

A distance of > 7 mm (> 0.28 in) must be maintained between the terminal strip and the TMT181 temperature head transmitter.

Weight

Component part		Weight
Level probe, outer diameter 22 mm (0.87 in)		290 g (10.228 oz)
Level probe, outer diameter 42 mm (1.65 in)		1150 g (40.561 oz)
Level probe, outer diameter 29 mm (1.14 in)		340 g (11.992 oz)
Extension cable	▪ PE ▪ PUR ▪ FEP	▪ 52 g/m (0.035 lbs/1 ft) ▪ 60 g/m (0.040 lbs/1 ft) ▪ 108 g/m (0.072 lbs/1 ft
Mounting clamp		170 g (5.996 oz)
Extension cable mounting screw G 1½" A		770 g (27.158 oz
Extension cable mounting screw NPT 1½"		724 g (25.535 oz)
Terminal box		235 g (8.288 oz)
Temperature head transmitter TMT181		40 g (1.411 oz)
Additional weight		300 g (10.581 oz)
Testing adapter		39 g (1.376 oz)

Material

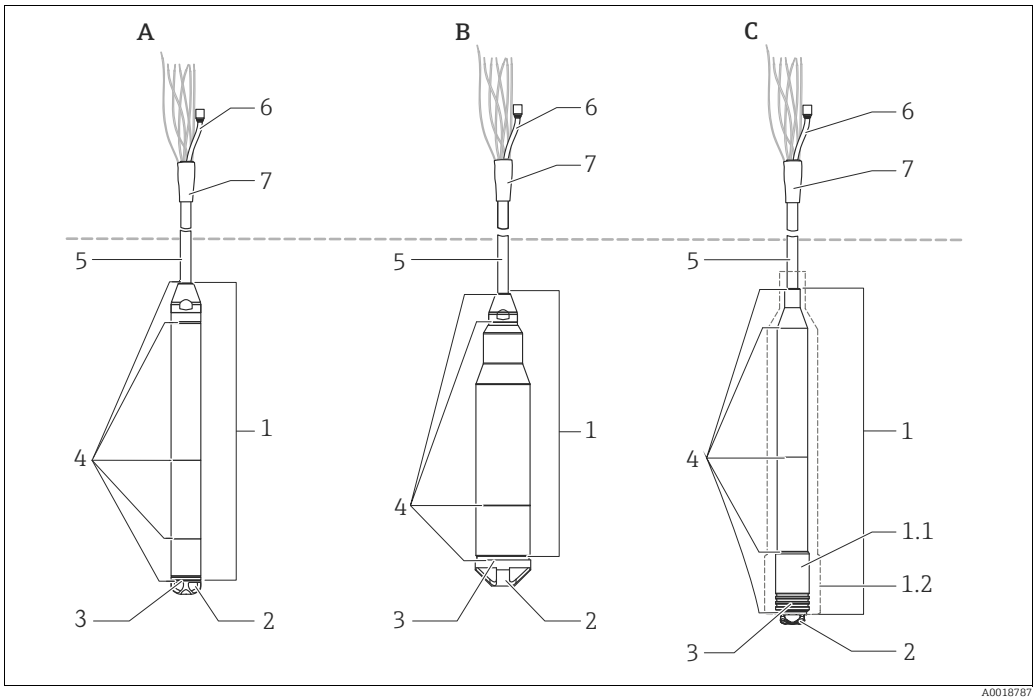

Material in contact with process		
Position number	**Component part**	**Material**
1	**A**: Level probe, outer diameter 22 mm (0.87 in) **B**: Level probe, outer diameter 42 mm (1.65 in) **C**: Level probe, outer diameter max. 29 mm (1.14 in)	316L (1.4404/1.4435)
1.1	Sensor sleeve	PPS (polyphenylene sulfide)
1.2	Heat-shrink sleeve The heat-shrink sleeve at the level probe acts as an insulation. It prevents electrical contact between the probe and the tank. Electrochemical corrosion is thus avoided.	Polyolefin and hot-melt adhesive
2	Protection cap **A** and **C**: with outer diameter 22 mm (0.87 in) and 29 mm (1.14 in) **B**: with outer diameter 42 mm (1.65 in)	PPO (Polyphenylenoxid) PFA (Perfluoralkoxy)
3	Process ceramic	Al_2O_3 (aluminum oxide ceramic)
4	Seal	EPDM or FKM Viton
5	Extension cable insulation For more information → 22	Either: ▪ PE-LD (low-density polyethylene) ▪ FEP (fluorinated ethylene propylene) ▪ PUR (polyurethane)
Material not in contact with process		
6	Pressure compensation tube	PA
7	Heat-shrink sleeve	Polyolefin

Terminal box (not in contact with process)

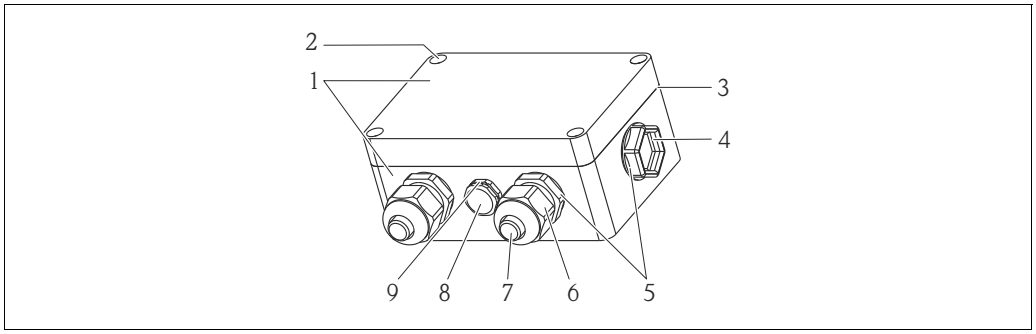

A0018917

Position number	Component part	Material
1	Housing	PC
2	Mounting screws (4 x)	A2
3	Seal	CR (Chloropren-Unvulcanized rubber)
4	Dummy plug M20x1.5	PBT-GF30
5	Cable gland M20x1.5	PE-HD
6		PA6
7		PA6-GF30
8	Pressure compensation tube	PA6-GF10, ePTFE
9	Pressure compensation tube O-ring	Silicone (VMQ)

Cable mounting screw (not in contact with process)

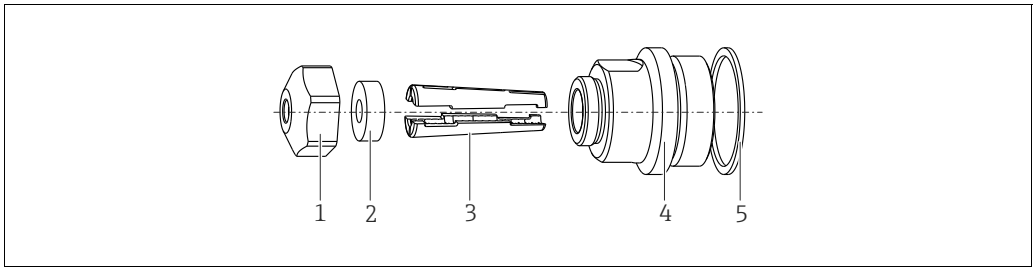

A0018918

Position number	Component part	Material
1	Cover cable mounting screw	304 (1.4301)
2	Seal	NBR
3	Clamping jaws	PA66-GF35
4	Mounting screw adapter G 1½" A, NPT 1½"	304 (1.4301)
5	Seal → only for G 1½" A	EPDM

Extension cable

PE	PUR	FEP
▪ Abrasion-resistant extension cable with Dyneema strain-relief members ▪ Shielded with aluminum-coated film ▪ Insulated with polyethylene (PE), black ▪ Copper wires, twisted ▪ Pressure compensation tube with Teflon filter	▪ Abrasion-resistant extension cable with Dyneema strain-relief members ▪ Shielded with aluminum-coated film ▪ Insulated with polyurethane (PUR), black ▪ Copper wires, twisted ▪ Pressure compensation tube with Teflon filter	▪ Abrasion-resistant extension cable ▪ Shielded with galvanized steel wire netting ▪ Insulated with fluorinated ethylene propylene (FEP), black ▪ Copper wires, twisted ▪ Pressure compensation tube with Teflon filter

Cable length

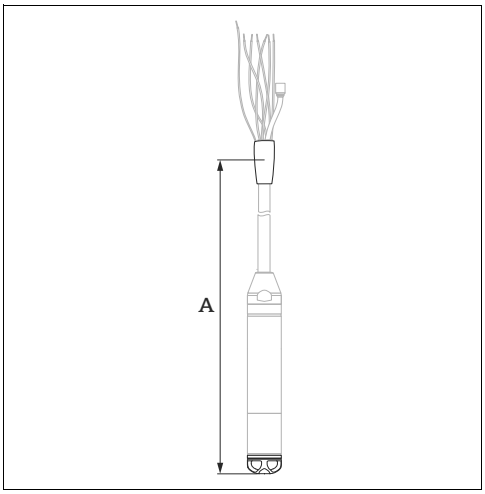

A Cable length

- Please refer also to "Load" (→ 📄 10).
- Cable lengths that can be ordered
  - Customer-specific length in meters or feet (→ 📄 24, "Ordering information")
  - Limited cable length when performing installation with freely suspended device with extension cable mounting screw or mounting clamp, as well as for hazardous areas: max. 300 m (984 ft).

When using the measuring device in hazardous areas, installation must comply with the applicable national standards and regulations and the Safety Instructions (XAs) or the Installation or Control Drawings (ZDs) "Documentation"

Cross-section

- Total outer diameter: 8.0 mm (0.31 in) ±0.25 mm (±0.01 in)
- FMX167: 3 x 0.227 mm^2 (3 x 26 AWG) + pressure compensation tube with Teflon filter
- FMX167 with Pt100 (optional): 7x0.227 mm^2 (7x26 AWG) + pressure compensation tube with Teflon filter
- Pressure compensation tube with Teflon filter:
  Outer diameter 2.5 mm (0.1 in), internal diameter 1.5 mm (0.06 in)

Cable resistance

per wire: ≤ 0.09 Ω/m

Cable length

- Please refer also to the "Load" (→ 📄 10).
- Cable lengths that can be ordered:
  - Customer-specific length in meters or feet (→ 📄 24, "Ordering information")
  - Limited cable length when performing installation with freely suspended device with extension cable mounting screw or mounting clamp, as well as for Ex approval: max. 300 m (984 ft).
- When using the measuring device in hazardous areas, installation must comply with the corresponding
  national standards and regulations and the Safety Instructions or Installation or Control Drawings.

Further technical data

- Minimum bending radius: 120 mm (4.72 in)
- Tensile strength: max. 950 N (213.56 lbf)
- Cable extraction force (= necessary tensile force to extract the cable from the level probe):
  - PE, FEP: typical ≥ 400 N (89.92 lbf), PUR: typical ≥ 150 N (33.72 lbf)
  - for use in hazardous areas: ≥ 100 N (73,75 lbf)
- Resistance to UV light
- PE: Usage in drinking water

Terminals

- Three terminals as standard in the terminal box
- 4-terminal strip can be ordered as an accessory, Order No: 52008938
  Conductor cross-section 0.08 to 2.5 mm^2 (28 to 14 AWG)

The 4-terminal strip is not intended for use in hazardous areas incl. CSA GP.

Certificates and approvals

CE mark

The device meets the legal requirements of the applicable EC Directives.
Endress+Hauser confirms successful testing of the device by affixing to it the CE mark.

C-tick symbol

The measuring system complies with the EMC requirements of the "Australian Communications and Media Authority (ACMA)".

Ex approval

- ATEX
- CSA
- FM

- The approvals to apply only for Waterpilot FMX167 without Pt100 and without TMT181.
- Waterpilot FMX167 is only available for use in hazardous areas with the FKM Viton seal.
- The cable marking cannot be ordered with the Ex approvals listed due to a potential electrostatic charge (→ 24, "Ordering information").
- All explosion protection data are given in separate documentation which is available upon request. The Ex documentation is supplied as standard with all devices approved for use in explosion hazardous areas (→ 28).

Drinking water approval

For FMX167 with outer diameter 22 mm (0.87 in) with EPDM seal
- KTW certificate
- NSF 61 approval
- ACS approval

Marine certificate

- GL (Germanischer Lloyd)
- ABS (American Bureau of Shipping)

Standards and guidelines

The European standards and guidelines that have been applied are listed in the associated EC Declarations of Conformity. In addition, the following standards were also applied for the Waterpilot FMX167:
- DIN EN 60770 (IEC 60770):
  Transmitters for use in industrial process control systems
  Part 1: Methods for performance evaluation
- DIN 16086:
  Electrical pressure measuring instruments,
  pressure sensors, pressure transmitters,
  pressure measuring instruments, concepts, specifications on data sheets
- EN 61326:
  Electrical equipment for measurement, control and laboratory use – EMC requirements
- EN 61010-1 (IEC 61010-1):
  Safety requirements for electrical equipment for measurement, control and laboratory use
- IEC 60529:
  Degrees of protection provided by enclosures

Ordering information

FMX167

You can enter the versions for the specific feature in the following table. The versions entered make up the complete order code. Options which are mutually exclusive are not marked.

10	Approval
A	Non-hazardous area
B	ATEX II 2 G Ex ia IIC T6
C	ATEX II 3 G Ex nA II T6
D	FM IS, Class I, Division 1, Groups A – D
E	CSA IS, Class I, Division 1, Groups A – D
F	CSA General Purpose

20	Connection
1	Probe cable
2	Mounting clamp, AISI 316L
3	Cable mounting screw G 1½", AISI 304
4	Cable mounting screw NPT 1½", AISI 304

30	Probe tube:
A	Outer diameter d = 22 mm, AISI 316L
B	Outer diameter d = 42 mm, flush-mounted, AISI 316L
C	Outer diameter d = 29 mm, AISI 316L with heat-shrink sleeve PPS/polyolefin for saltwater applications
D	Outer diameter d = 22 mm, AISI 316L + potable water approval KTW/NSF/ACS (can only be selected in conjunction with EPDM seal and PE probe cable)

40	Measuring range:		
	Measuring range		**Measuring range**
BA	0 to 0.1 bar	MA	0 to 1 mH_2O
BB	0 to 0.2 bar	MB	0 to 2 mH_2O
BC	0 to 0.4 bar	MC	0 to 4 mH_2O
BD	0 to 0.6 bar	MD	0 to 6 mH_2O
BE	0 to 1.0 bar	ME	0 to 10 mH_2O
BF	0 to 2.0 bar	MF	0 to 20 mH_2O
BG	0 to 4.0 bar	MG	0 to 40 mH_2O
BH	0 to 10.0 bar	MH	0 to 100 mH_2O
BK	0 to 20.0 bar	MK	0 to 200 mH_2O
PA	0 to 1.5 psi	FA	0 to 3 ftH_2O
PB	0 to 3 psi	FB	0 to 6 ftH_2O
PC	0 to 6 psi	FC	0 to 15 ftH_2O
PD	0 to 10 psi	FD	0 to 20 ftH_2O
PE	0 to 15 psi	FE	0 to 30 ftH_2O
PF	0 to 30 psi	FF	0 to 60 ftH_2O
PG	0 to 60 psi	FG	0 to 150 ftH_2O
PH	0 to 150 psi	FH	0 to 300 ftH_2O
PK	0 to 300 psi	FK	0 to 600 ftH_2O
VV	Adjusted to customer specifications from 0 to ___ (upper range value) in ___ (unit),upper range value: 0.1 bar (1 mH_2O, 1.5 psi, 3 ftH_2O) to 20 bar (200 m_2HO, 300 psi, 600 ft_2HO)		

50	Sensor seal:
1	FKM Viton
2	EPDM

60	Probe cable:
A	... m, shortable, PE
B	10 m, shortable, PE
C	20 m, shortable, PE
E	30 ft, shortable, PE
F	60 ft, shortable, PE
G	... ft, shortable, PE
I	... m, shortable, FEP
K	10 m, shortable, FEP
L	20 m, shortable, FEP
M	30 ft, shortable, FEP
N	60 ft, shortable, FEP
P	... ft, shortable, FEP

FMX167								Order code

→ Ordering information for continued on next page

FMX167 (continued)

60						**Probe cable:**			
						R	... m cable, shortable, PUR		
						S	10 m cable, shortable, PUR		
						T	20 m cable, shortable, PUR		
						U	... m cable, shortable, PUR		
						V	30 ft cable, shortable, PUR		
						W	60 ft cable, shortable, PUR		
70							**Additional option:**		
							7	Basic version	
							1	Pt100, 4-wire	
							5	Pt100 + temperature head transmitter TMT181, 2-wire, 4 to 20 mA = −20 to +80 °C (-4 to +176°F)[1]	
							3	Terminal box IP66/67	
							4	Terminal box IP66/67 + Pt, 4-wire	
							A	m cable marking>installation	
							B	ft cable marking>installation	
							C	m cable marking, terminal box, cable marking>installation, terminal box IP66/67	
							D	ft cable marking, terminal box, cable marking>installation, terminal box IP66/67	
							S	GL/ABS marine certificate	
995								**Marking**	
								1	Measuring point (TAG)
FMX167									Complete order code

[1] incl. terminal box, see feature "3" or "4"

Accessories

Mounting clamp

- Endress+Hauser offers a mounting clamp for simple FMX167 mounting (→ 17)
- Material: 316L (1.4404) and fiberglass reinforced PA (polyamide)
- Order number: 52006151, "Ordering information" (→ 24)

Terminal box

- Terminal box IP66, IP67 with GORE-TEX®-filter incl. 3 installed terminals.
  The terminal box is also suitable for installing a temperature head transmitter (Order No. 52008794) or for four additional terminals (Order No. 52008938) → 26.
- Order number: 52006152

The terminal box is not intended for the FMX167 with Ex nA explosion protection in the hazardous area. When using the terminal box in hazardous areas, installation must comply with the corresponding national standards and regulations and the Safety Instructions or Installation or Control Drawings.

Additional weight

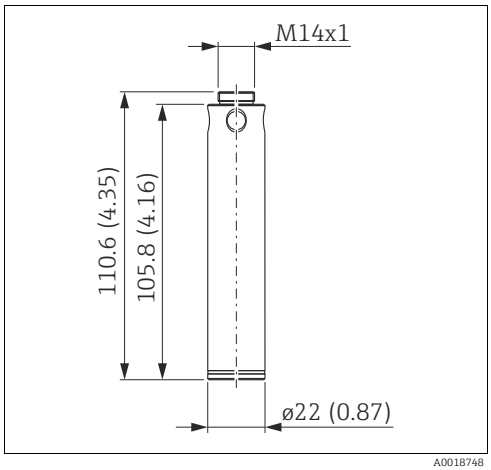

For FMX167 with an outer diameter of 22 mm (0.87 in) and 29 mm (1.14 in)

- Endress+Hauser offers additional weights to prevent sideways movement that results in measuring errors, or to make it easier to lower the device in a guide tube.
  You can screw several weights together. The weights are attached directly to the FMX167.
  For FMX167 with outer diameter 29 mm (1.14 in), a maximum of 5 weights may be screwed.
- Material: 316L (1.4435)
- Weight: 300 g (10.581 oz)
- Order number: 52006153

TMT181 temperature head transmitter

- 2-wire temperature head transmitter, configured for a measuring range from −20 to +80 °C (−4 to 176 °F). This setting offers a temperature range of 100 K which can be easily mapped. Please note that the Pt100 resistance thermometer is designed for a temperature range from −10 to +70 °C (−14 to 158 °F) → 26.
- Order number: 52008794

The TMT181 temperature head transmitter is not intended for use in hazardous areas incl. CSA GP.

Extension cable mounting screw

- Endress+Hauser offers extension cable mounting screws to simplify the installation of the FMX167 and to close the measuring open (→ 18).
- Material: (→ 20)
- Order number for extension cable mounting screw:
  - 52008264 (G 1½" A)
  - 52009311 (NPT 1½")

Terminals

- Four terminals in strip for FMX167 terminal box, suitable for wire cross-section of 0.08 to 2.5 mm^2 (28...14 AWG)
- Order number: 52008938

The 4-terminal strip is not intended for use in hazardous areas incl. CSA GP.

Cable shortening kit

- The cable shortening kit is used to easily and professionally shorten a cable, see the documentation SD00552P/00/A6.
- Order Number: 71222671

The cable shortening kit is not intended for the FMX167 with FM/CSA approval.

Cable marking

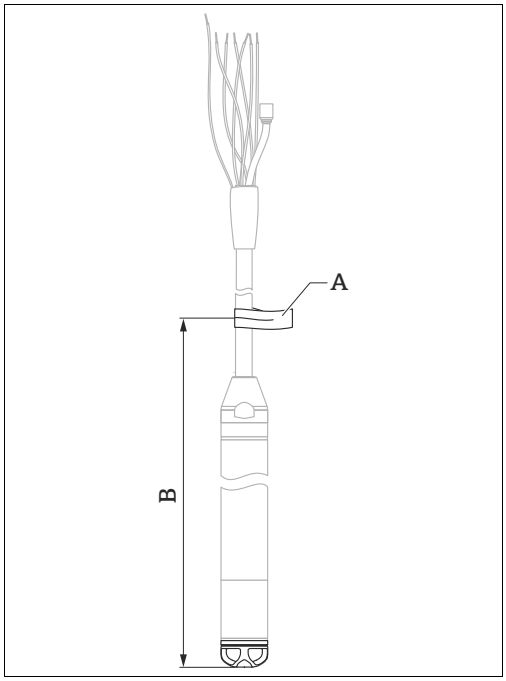

A Cable marking
B Cable marking tolerance

- To make installation easier, Endress+Hauser offers a mark on the extension cable for a customer-specific length, see also → 24, "Ordering information".
- Cable marking tolerance (distance to the lower end of the cable probe):
  Cable length < 5 m (16 ft): ±17.5 mm (0.69 in)
  Cable length > 5 m (16 ft): ±0,2 %
- Material: PET, Adhesive: acrylic
- Immunity to temperature change:
  −30 to +100 °C (-22 to +212 °F)

NOTICE

The mark is for installation purposes only.

- It must be thoroughly removed without trace in the case of devices with drinking water approval. The extension cable must not be damaged in the process

Not for use in hazardous areas.

Test adapter

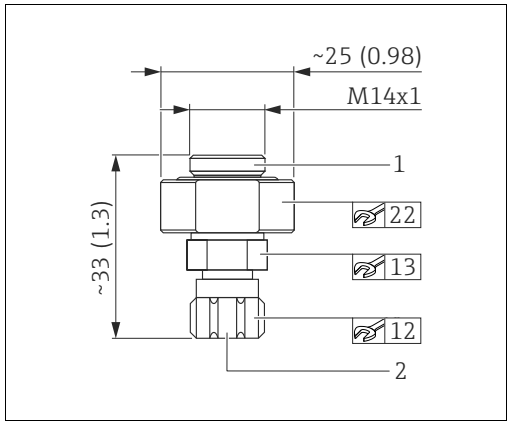

1 FMX167 level probe connection
2 Compressed air hose connection, internal diameter of quick coupling piece 4 mm (0.16 in)

For FMX167 with an outer diameter of 22 mm (0.87) and 29 mm 1.14 in

- Endress+Hauser offers a testing adapter to ease function-testing of the level probes.
- Observe the maximum pressure for the compressed air hose and the maximum overload for the level probe (→ 9).
- Maximum pressure of the quick coupling piece supplied: 10 bar (145 psi)
- Adapter material: 304 (1.4301)
- Quick coupling piece material: anodized aluminum
- Adapter weight: 39 g (1.376 oz)
- Order number: 52011868

Documentation

The following document types are also available in the Download Area of the Endress+Hauser website: www.endress.com → Download

Field of activities

- Pressure measurement: FA00004P/00/EN
- Recording technology: FA00014R/09/EN
- System components: FA00016K/09/EN

Technical Information

- Waterpilot FMX21 with 4 to 20 mA with HART output signal: TI00431P/00/EN
- Deltapilot M: TI00437P/00/EN
- Temperature Head Transmitter iTEMP PCP TMT181: TI00070R/09/EN

Operating Instructions

- Waterpilot FMX167: BA00231P/00/EN
- Cable shortening kit: SD00552P/00/A6

Brief Operating Instructions

KA01190P/00/EN

Safety instructions

Safety Instructions (XA) are supplied with the device depending on the approval. These instructions are anintegral part of the Operating Instructions.

Approval	Feature in order code	Types of protection	Category	Documentation
ATEX	B	Ex ia IIC	II 2 G	XA00131P
ATEX	B	Ex nA IIC	II 3 G	XA00132P
CSA	E	Ex ia IIC	n/a	XA00608P (960503-2009)
FM	D	AEx ia IIC	n/a	XA00632P (960503-1009)

The nameplate provides information on the Safety Instructions (XA) that are relevant for the device.

Drinking water approval

- SD00289P/00/A3 (NSF)
- SD00126P/00/A3 (KTW/ACS)

71294706

www.addresses.endress.com

Endress+Hauser

People for Process Automation